Ferroli

TOP FAN

Fan coil

EUROVENT CERTIFIED PERFORMANCE

TOP FAN

MAIN FEATURES

- 3 versions, 8 models with centrifugal fan.
- Versions available:
  VM-B for vertical and horizontal installation and intake from below.
  VM-F for vertical and horizontal installation and intake from the front.
  VN without casing for vertical and horizontal installation
- Cover cabinet made using plastic parts and galvanised sheet metal parts, furnace-baked with epoxy powder paint.
- Galvanised steel load-bearing structure.
- Heat exchange coil made with aluminium finned copper tubes, and brass coil headers especially designed to ensure low pressure drop.
- Easily removable and cleanable air filter, reusable after washing or blowing.
- Ventilation unit with three-speed motor and aluminium fans.
- Wide range of controls with installation either on the unit or remote, wall-mounted installation.

Accessories

- Single water coil for heating-only.
- Electrical heating elements.
- Extra side trays for easier installation.
- ON/OFF valve kit for main water coil.
- ON/OFF valve kit for extra water coil.
- Bases for floor-mounting.
- Rear closing panel.
- Straight and elbow intake couplings for version without casing.
- Straight and elbow outlet couplings for version without casing.
- Outlet plenum complete with circular coupling flanges.
- Intake grill complete with filter.
- Outlet grill with adjustable fins.
- Minimum temperature trigger probe.

TOP FAN

Ducted Version VN
without casing

Evolved thermostat

DIMENSIONS

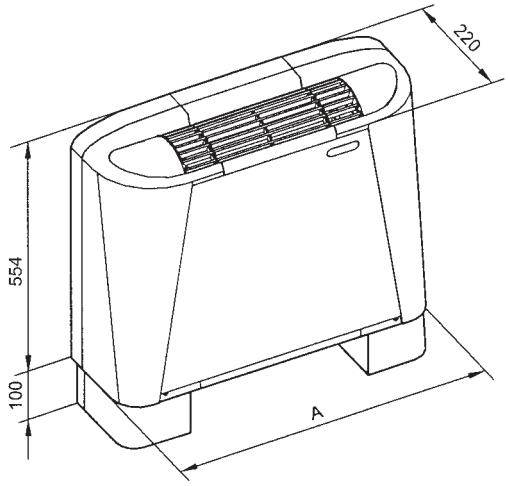

MOD.	15	20	30	40	60	80	100	120
A mm	690	690	940	940	1190	1190	1440	1440
Weight kg	14	14	20	20	27	27	34	34

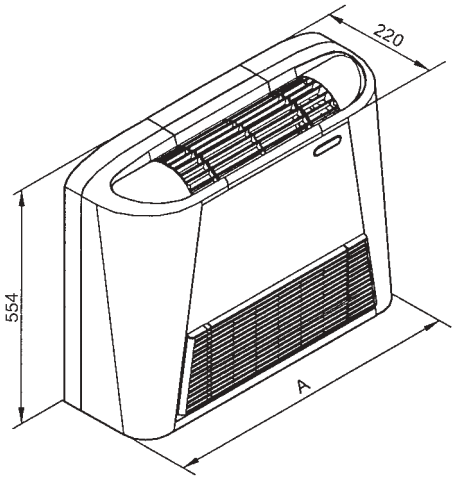

MOD.	15	20	30	40	60	80	100	120
A mm	690	690	940	940	1190	1190	1440	1440
Weight kg	15	15	21	21	28	28	36	36

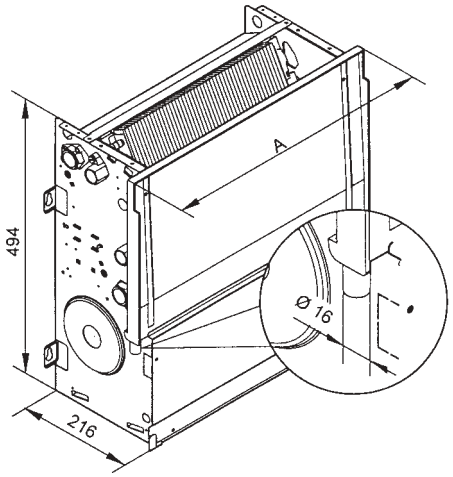

MOD.	15	20	30	40	60	80	100	120
A mm	474	474	724	724	974	974	1224	1224
Weight kg	11	11	15	15	22	22	29	29

PERFORMANCE DATA

Centrifugal series

TYPE				15	20	30	40	60	80	100	120
HEAT OUTPUT	(E)	max.	W	2.800	3.650	5.500	6.500	9.400	12.500	14.900	15.800
		med.	W	2.400	3.150	4.550	5.450	7.900	10.800	12.500	13.270
		min.	W	1.800	2.250	3.400	4.000	5.800	8.300	9.600	10.000
WATER FLOW RATE	(E)		l/h	241	314	473	559	808	1.075	1.281	1.359
WATER PRESSURE DROP	(E)		kPa	2,9	4,9	13,2	18,5	18,1	17,7	10,8	12,1
HEAT OUTPUT	(E) (1)		W	1.700	2.050	3.200	3.850	5.100	7.200	8.700	9.300
WATER PRESSURE DROP	(E)		kPa	2	3	8	15	14	12	8	10
REFRIGERATING CAPACITY	(E)	max.	W	1.100	1.400	2.100	2.800	4.000	4.900	6.100	6.850
		med.	W	980	1.200	1.850	2.450	3.550	4.350	5.500	6.100
		min.	W	770	950	1.450	1.900	2.800	3.600	4.400	5.000
WATER FLOW RATE	(E)		l/h	189	241	361	482	688	843	1.049	1.178
DEHUMIDIFYING MAX. SPEED.			g/h	230	275	500	650	870	930	1.160	1.350
WATER PRESSURE DROP	(E)		kPa	2,4	3,9	10,6	18,5	18	14,9	9,9	12,5
THERMAL POWER	(E)	max.	W	1.250	1.650	2.550	3.150	4.100	5.050	6.200	6.950
OF SUPPLEMENTARY		med.	W	1.070	1.420	2.110	2.640	3.440	4.360	5.200	6.190
BANK		min.	W	800	1.010	1.570	1.940	2.530	3.350	3.990	4.400
WATER FLOW RATE			l/h	108	142	219	271	353	434	533	598
WATER PRESSURE DROP			kPa	1,7	3	8,6	13,2	4,1	6,2	12,8	16,1
THERM. POW.OF HEAT. EL.			W	800	800	1.500	1.500	2.200	2.200	2.600	2.600
AIR FLOW RATE		max.	m^3/h	215	280	410	515	750	1.050	1.200	1.350
		med.	m^3/h	170	210	310	400	600	850	970	1.070
		min.	m^3/h	110	140	220	290	410	570	670	720
No. OF FANS				1	1	1	2	2	2	3	3
SOUND POWER LEVEL	(E)	max.	dB(A)	45	48	52	54	55	61	63	65
	(E)	med.	dB(A)	39	42	45	47	50	58	59	60
	(E)	min.	dB(A)	32	35	39	41	39	48	51	52
SOUND PRESSURE	(2)	max.	dB(A)	36	39	43	45	46	52	54	56
	(2)	med.	dB(A)	30	33	36	38	41	49	50	51
	(2)	min.	dB(A)	23	26	30	32	30	39	42	43
MAX MOTOR POWER	(E)		W	35	38	55	76	85	144	163	200
WATER COIL COUPLINGS 3 COIL			Ø	3/4"	3/4"	3/4"	3/4"	3/4"	3/4"	3/4"	3/4"
WATER COIL COUPLING 1 COIL			Ø	1/2"	1/2"	1/2"	1/2"	1/2"	1/2"	1/2"	1/2"
3R BANK WATER CONTENTS			l	0,82	0,82	1,26	1,26	1,88	1,88	2,42	2,42
1R BANK WATER CONTENTS			l	0,22	0,22	0,36	0,36	0,5	0,5	0,64	0,64
CONDENSATION OUTLET CONN.			Ø	16	16	16	16	16	16	16	16

NOTES:

Power source voltage reating: 230/1/50 (V/ph/Hz)

Heating mode: Amb. air temp.: 20°C - Inlet water temp.: 70°C, Δt water 10°C at top fan speed - *Inlet water temp.: 50°C water flow rate as per cooling - Fan speed: max.

(1) Inlet water temp.: 50°C, water flow rate as in cooling mode

Fan speed: max

Cooling: Amb. air temp.: 27°C D.B./19°C W.B. - Inlet water temp.: 7°C, Δt water 5°C - Fan speed: max; Water flow rate same as top speed at medium and minimum fan speeds.

Fan speed: max

(2) Sound pressure in 100 m^3 room with 0.5 sec reverberation time.

(E) EUROVENT certified data.

TABLE OF ACCESSORY MATCHES

DESCRIPTION	Model	15	20	30	40	60	80	100	120	Versions
Remote control switch	CMR-F	●	●	●	●	●	●	●	●	VM-B/VM-F/VN
Basic remote controlled therm.	TAR-F	●	●	●	●	●	●	●	●	VM-B/VM-F/VN
Upgraded remote controlled therm.	TER-F	●	●	●	●	●	●	●	●	VM-B/VM-F/VN
Cabinet switc	CM-F	●	●	●	●	●	●	●	●	VM-B/VM-F/VN
Basic cabinet thermostat	TA-F	●	●	●	●	●	●	●	●	VM-B/VM-F/VN
Upgraded cabinet termostat	TE-F	●	●	●	●	●	●	●	●	VM-B/VM-F/VN
Bearing feet	PA-F	●	●	●	●	●	●	●	●	VM-B
Additional horizontal tray	BCO-F	●	●	●	●	●	●	●	●	VM-B/VM-F/VN
Additional vertical tray	BCV-F	●	●	●	●	●	●	●	●	VM-B/VM-F/VN
Suppl. bank 3-way On-Off valve	VB1-F	●	●	●	●	●	●	●	●	VM-B/VM-F/VN
3-way On-Off valve for bank	VB3-F	●	●	●	●	●	●	●	●	VM-B/VM-F/VN
Enabling thermostat	TC-F	●	●	●	●	●	●	●	●	VM-B/VM-F/VN
Supplementary bank	BS-F1	●	●							VM-B/VM-F/VN
	BS-F2			●	●					VM-B/VM-F/VN
	BS-F3					●	●			VM-B/VM-F/VN
	BS-F4							●	●	VM-B/VM-F/VN
Straight delivery flange	FMD-F1	●	●							VN
	FMD-F2			●	●					VN
	FMD-F3					●	●			VN
	FMD-F4							●	●	VN
Perpendicular delivery flange	FMP-F1	●	●							VN
	FMP-F2			●	●					VN
	FMP-F3					●	●			VN
	FMP-F4							●	●	VN
Delivery plenum	PM-F1	●	●							VN
	PM-F2			●	●					VN
	PM-F3					●	●			VN
	PM-F4							●	●	VN
Straight intake flange	FAD-F1	●	●							VN
	FAD-F2			●	●					VN
	FAD-F3					●	●			VN
	FAD-F4							●	●	VN
Perpendicular intake flange	FAP-F1	●	●							VN
	FAP-F2			●	●					VN
	FAP-F3					●	●			VN
	FAP-F4							●	●	VN
Delivery grille	GM-F1	●	●							VN
	GM-F2			●	●					VN
	GM-F3					●	●			VN
	GM-F4							●	●	VN
Intake grille	GA-F1	●	●							VN
	GA-F2			●	●					VN
	GA-F3					●	●			VN
	GA-F4							●	●	VN
Rear closing panel	PC-F1	●	●							VM-B/VM-F
	PC-F2			●	●					VM-B/VM-F
	PC-F3					●	●			VM-B/VM-F
	PC-F4							●	●	VM-B/VM-F
Electric heating elements	RE-F1	●	●							VM-B/VM-F/VN
	RE-F2			●	●					VM-B/VM-F/VN
	RE-F3					●	●			VM-B/VM-F/VN
	RE-F4							●	●	VM-B/VM-F/VN

Ferroli

CONTROLS

SWITCH

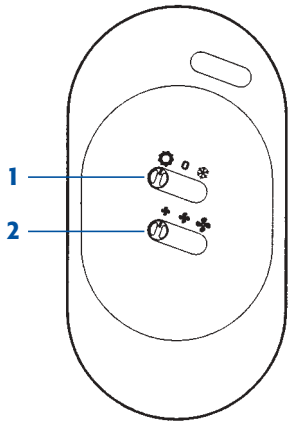

COMMUTATOR: cabinet (CM-F) and remote control(CMR-F)

1. when in position **0**, selector **1** indicates the off command. Turn to the **sun** symbol to select the heat mode or to the **snow** symbol to select the cool mode.
2. selector **2** is used to choose the minimum, medium or maximum fan speeds.

BASIC THERMOSTAT

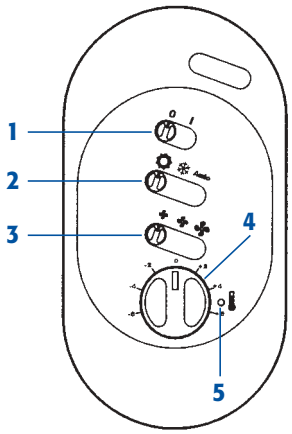

BASIC THERMOSTAT: cabinet (TA-F) and remote control (TAR-F)

1. **ON/OFF** cursor to turn the appliance on and off.
2. **Seasonal selector;** turn to the **sun** symbol to select the heat mode or to the **snow** symbol to select the cool mode. Turn to **auto** and the control will select the operating mode on its own depending on the ambient temperature.
3. Selector **3** is used to choose the minimum, medium or maximum fan speeds.
4. Use knob **4** to set the required temperature. The temperature setting that corresponds to position **0** is **20°C in heat mode** and **25°C in the cool mode**.
5. The **red led** is on when the thermostaf function of the control is operating.

EVOLVED THERMOSTAT

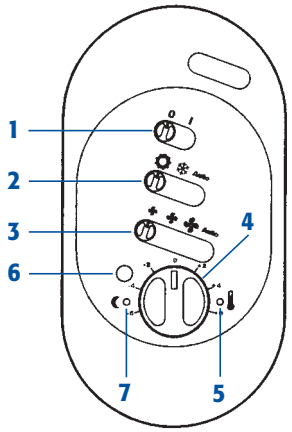

UPGRADED THERMOSTAT: cabinet (TE-F) and remote control (TER-F)

1. **ON/OFF** cursor to turn the appliance on and off.
2. **Seasonal selector;** turn to the **sun** symbol to select the heat mode or to the **snow** symbol to select the cool mode. Turn to **auto** and the control will select the operating mode on its own depending on the ambient temperature.
3. Selector **3** is used to choose the minimum, medium or maximum fan speeds. In automatic mode, the control selects the adequate speed on its own.
4. Use knob **4** to set the required temperature. The temperature setting that corresponds to position **0** is **20°C in heat mode** and **25°C in the cool mode**.
5. The **red led** is on when the thermostaf function of the control is operating.
6. The **economy** key can be used to change the winter and summer set points. When the key is pressed, the **green led (7)** will come on and ventilation will be forced to minimum speed. Meanwhile, the temperature corresponding to position **0** is changed to **17°C in heat mode** and **28°C in the cool mode.**

Cod. 000000000 - 09.2004

GRUPPO FERROLI

Ferroli spa ¬ 37047 San Bonifacio (Verona) Italy ¬ Via Ritonda 78/A
tel. +39.045.6139411 ¬ fax +39.045.6100233
www.gruppoferroli.com ¬ e-mail: export@ferroli.it